ALARM ANNUNCIATORS

Minilec Microprocessor Based Alarm Annunciators are designed to keep an alert & watchful eye on your plant & processes. The entire range has been designed with an insight into the modern day manufacturing plant & its future requirements. Minilec Alarm Annunciators are equipped with microprocessor-based design, super bright LED facia windows, site selectable, programmed sequences as per ISA standard & thoughtful provisions for troubleshooting & maintenance. Dynamic, Alert & Responsive... These unique advantages have helped the Minilec Annunciators to be an icon in the power T & D industry & engineering establishments in India. The world class Minilec Annunciator has made its presence felt in Overseas markets.

MODELS

MICROWARN 0600,
MBAS 0600,
MBAS 9700,
MBAS 9900,
MBAS 08,
Annunciation Panels

FEATURES

- 4 windows to 128 windows
- Integral & Split models
- Microprocessor based
- Super bright LEDs for facia
- Standard operating sequenses
- Any other custom- made sequenses
- NO-NC & Trip Non-Trip site selectable
- Repeat relays
- Supply fail annunciation / Indication
- Choice of 3 window sizes
- Choice of five colours
- RS 232 / RS 485 Output Port

FUNCTIONS

- Continuous monitoring of input parameters
- Control of process through outputs & software
- Data acquisition & communication
- Data Storage & records through PC

5 YEARS WARRANTY!

Ordering Instructions

- ✓ Product Family Name
- ✓ Model Name
- ✓ Aux. Supply / Control supply voltage
- ✓ No. of Inputs (Windows)
- ✓ Operating sequence

ALARM ANNUNCIATORS

The Undisputed Leader

Many pioneering advancements have been introduced for the first time by Minilec. The Minilec range of Alarm Annunciators is equipped with well researched and innovative features highly appreciated by consultants and customers (and imitated by competitors !)

Some of the trend setting technologies and features initiated by Minilec are as follows :

- Microprocessor based system
- For robust design and easier troubleshooting.
- ISO 9001 standards : For high standards of quality assurance and reliability.
- LEDs for facia : For lower maintenance costs, long life and low energy consumption.
- Multi coloured windows : For simplified fault differentiation.
- Standard modules : For seamless integration and better aesthetics.
- Moulded enclosure : For space savings and improved aesthetics.
- Easily accessible DIP switches : For faster programming by eliminating the need to open the unit.
- Any operating sequence : For added flexibility and convenience.
- Serial communication : For computerised fault detection and automatic documentation.

Solutions for Varying Needs

The Minilec range of annuciators is highly diversified and adaptable to a wide spectrum conditions. Be it a Power station, Sub station, Sugar factory, Steel plant, Fertiliser / Petrochemical plant, ships and dockyards, railways or for that matter, any process plant. Be it in the hot summers of Rajasthan, Egypt of Indonesia or the humid atmosphere of Clacutta, Chennai or Malaysia, Minilec takes it all in its stride !

The Product Range

MBAS 08 - for 4, 6, & 8 Points
MICROWARN 0600 - for 6,8,12 points
MBAS 0600 - for 4-24 points
MBAS 9700 - for 16, 32, 48, 64, 80, 96, 112, 128 points
MBAS 9900 - for 4, 6 & 8 points

The Advant -edges

Advantages of Microprocesor Based Alarm Annunciators over solid state version

- Less components hence high reliability.
- Compact size, light weight.
- Low power consumption.
- Flexibility - any operating sequence can be provided.
- Being the latest in technology, can be configured easily with any other advanced system.

The Unique Features

- Powerful microprocessor based circuit.
- Built in system watch dog.
- First fault identification.
- Optically isolated fault inputs.
- Site selectable alarm sequences (ISA standards)
- Facia with super bright LEDs instead of high power consuming short life filament lamps.
- Site selectable fault contact configuration (NO/NC).
- Special SMPS power supply of wide range.
- Sleek, modern, aesthetic design.

Additional Features

- Grouping feature for differentiation between Trip / Non - Trip type faults.
- Repeat relays for parallel annunciation.
- Supply fail annunciation / indication.
- Manned / Unmanned feature.
- Parallelling of units.
- Group fault alarm.
- Choice of five window colours : Red, Green, Amber (Yellow), White & Blue.

Reliability

Minilec annunciators have been tested satisfactorily at CPRI (Bangalore), SISIR Singapore, ERTL, ETDC & ERDA for environmental and functional tests as per relevant standards.

Upon request available with CE marking.

All Alarm Annunciator carry 5 yrs. warranty.

The Highlights

- MBAS series with replaceable windows, 2 window sizes, DIP switches outside for easy programming
- Common power supply 90-270 AC/DC, 18-58 V AC/DC and DIP switches outside for Microwarn 0600 models.
- Split architecture - economic/cost saving, for 19" rack concept for MBAS 9700 models.
- Serial port - RS232C / RS485 for MBAS 0600 / MBAS 9700 models.

minilec®

MICROWARN 0600

12 Windows Model

8 Windows Model
with push button

Now with Reduced depth

This is a modified version of earlier Microwarn 9600 model which has been discontinued. Microwarn 0600 consists of 3 basic sections :

Microwarn 0600 is now more compact than before with reduced depth. Also it can have 3rd output relay for extra function

(A) The Power Pack
(B) The CPU
(C) The Facia,

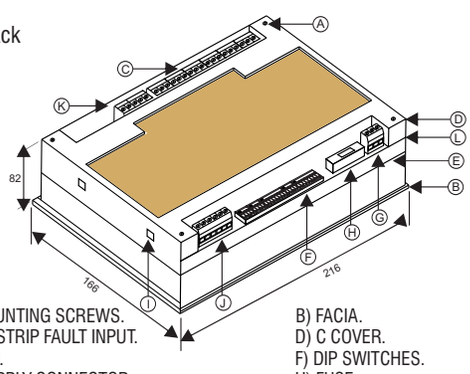

NOTES :-

A) COVER MOUNTING SCREWS.
B) FACIA.
C) TERMINAL STRIP FAULT INPUT.
D) C COVER.
E) LED BOARD.
F) DIP SWITCHES.
G) POWER SUPPLY CONNECTOR.
H) FUSE
I) SLOT FOR MOUNTING CLAMP.
J) RELAY OUTPUT.
K) TERMINAL FOR EXTERNAL PUSH BUTTON.
L) SMPS + CPU CARD.

TECHNICAL SPECIFICATIONS :

Supply Voltage	24/30/48/ V DC,18-58 V AC/DC, 90-270V AC/DC+10% –15%
Windows	12/8/6
Window Sizes	45 x 45 mm
Display Device	Super bright high efficiency low power consuming LED's
Facia Type	Front Replaceable
Window/LED Colour	Standard colour available RED, Optional colours Yellow / Amber, Green
Flash Rate	Fast - 60 flashes/min. Slow - 30 flashes/min.
Response Time	25 msec. ± 10 msec.
Input Signal	Potential free contacts (NO or NC site selectable)
Interrogation Voltage	+ 12 V DC
Output Contacts	1 NO + 1 NO (optional) + 1 NO (Optional)
Architecture	Integrated
Operational Seq.	ISA Standards sequences - Auto/Manual/First-up/Ringback (optional) OR any other sequence on request
Operational Temp.	0-60°C
Power Consumption	1.5 Watts per Window (Max.)
Optional	Grouping / AC-DC fail Annunciation
Dimensions (mm)	
Panel Cutout (L x W)	153 x 203
Overall (L x W x D)	166 x 216 x 82

Wherever not specified Contact Rating : 5A @ 230 V AC (resistive) * CE marked products available on request.

A) The Power Pack :
The Microwarn 0600 is powered by a highly reliable and noise free, specially designed power supply. It converts the available power source (AC/DC voltage supply) into a regulated and filtered DC output, which is fed to the annunciator unit.

B) The CPU :
This is the Central Processing Unit of Microwarn 0600 which scans and processes the incoming fault signals from the various potential free field contacts and drives the corresponding LED windows and the audible devices in order to announce the fault, according to the operating sequence selected.

C) The Facia :
This section consists of facia windows illuminated by "Super Bright LEDs" on occurrence of any fault. The Super Bright LEDs ensure a long and absolutely maintenance free window life along with a good visibility, and have very low power consumption.

NO/NC or sequence selection DIP switches are located outside, hence programming is now possible without opening the unit.
Models of 12, 8, 6 windows are available. 8 and 6 window models are with built-in push buttons.

Optional Features:
- 3rd Supervisory Relay
- RS 232 / 485 output port
- Grouping facility

Dimensional Details

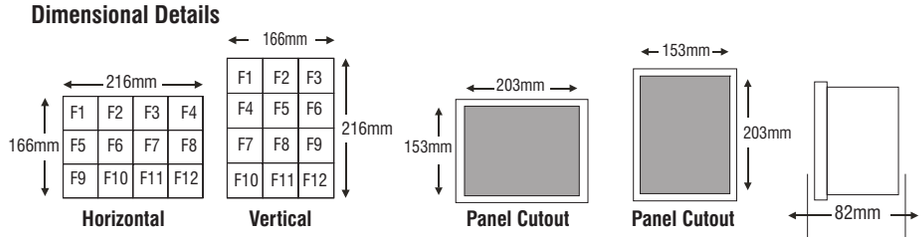

Typical Connection Diagram

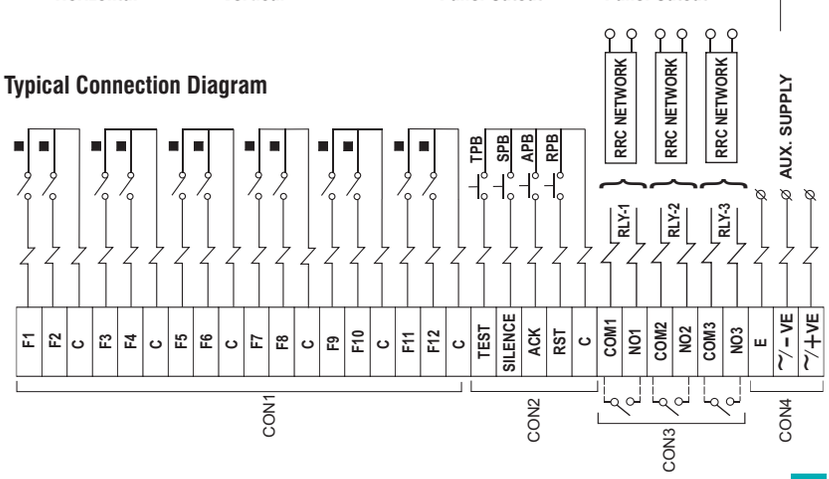

ALARM ANNUNCIATORS

MBAS 0600

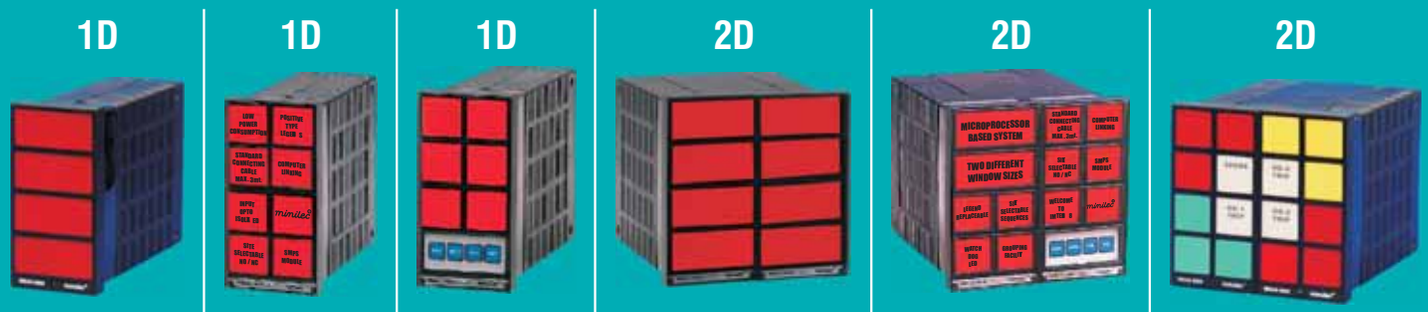

MBAS 0600 is a improved version of earlier MBAS 9400, and is available for 4 to 32 windows

The Functional Features

- Fixed Sequence (S1/S2/S3/S4)
- Potential free dry contact inputs
- NO/NC inputs selectable configuration
- Relay output for external Audible Hooter 3rd Relay optional for either of below mentioned features
  - a) Ring back hooter
  - b) Supervisory control

The Design Features

- Single chip microcontroller logic
- Opto isolated inputs and outputs
- Super Bright LED window illumination
- High Noise immunity / isolation
- Switch mode power supply
- Self surveillance watchdog LED

The Constructional Flexibility

- Conforming to DIN panel cutouts
- Replacable snap-on window capsules
- Two different window size
- Expandable modules
- Moulded enclosures

Optional Features

- Any custom built operating sequences
- Manned / Unmanned function
- Fault Follower contact output per fault Input (NO or NC)
- Supply fail indication / annunciation Built in
- Built-in control push buttons

System Enclosures

The MBAS 0600 annunciation systems is configured in multiples of four basic ABS moulded enclosures

Size 1 D **Size 2 D** **Size 3 D** **Size 4 D**

Basic Standard Enclosures

Back view showing Terminal details

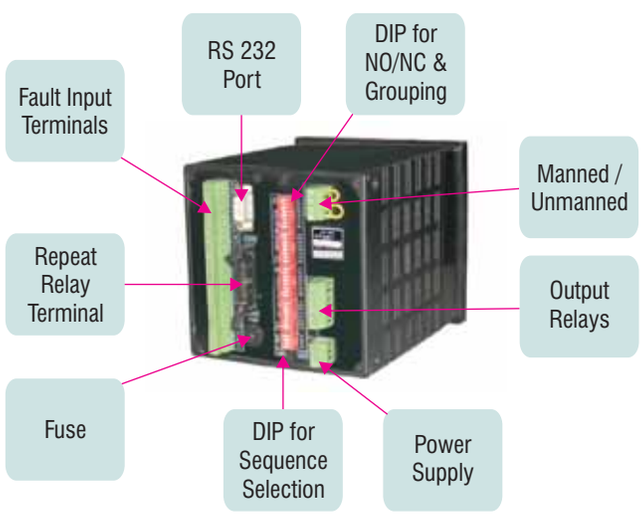

Functional Block Diagram

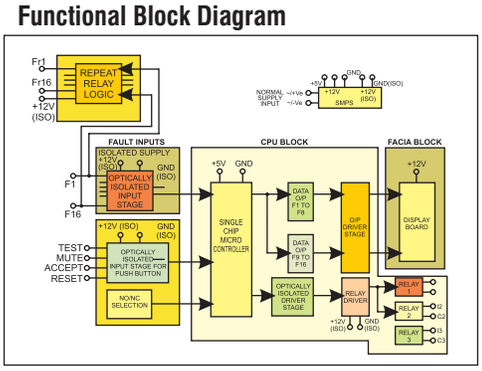

Part names & locations

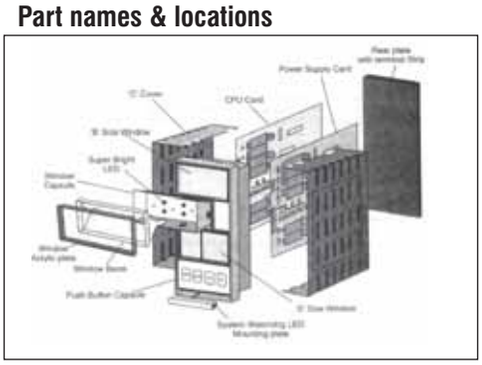

PC Side software

ALARM ANNUNCIATORS

minilec®

MBAS 0600

CE* ABS

3D

312B0S00

3D

30B24S00

4D

416B0S00

4D

432B0S00

Connection Diagram (FOR MAX. 32 POINT MBAS 0600.)

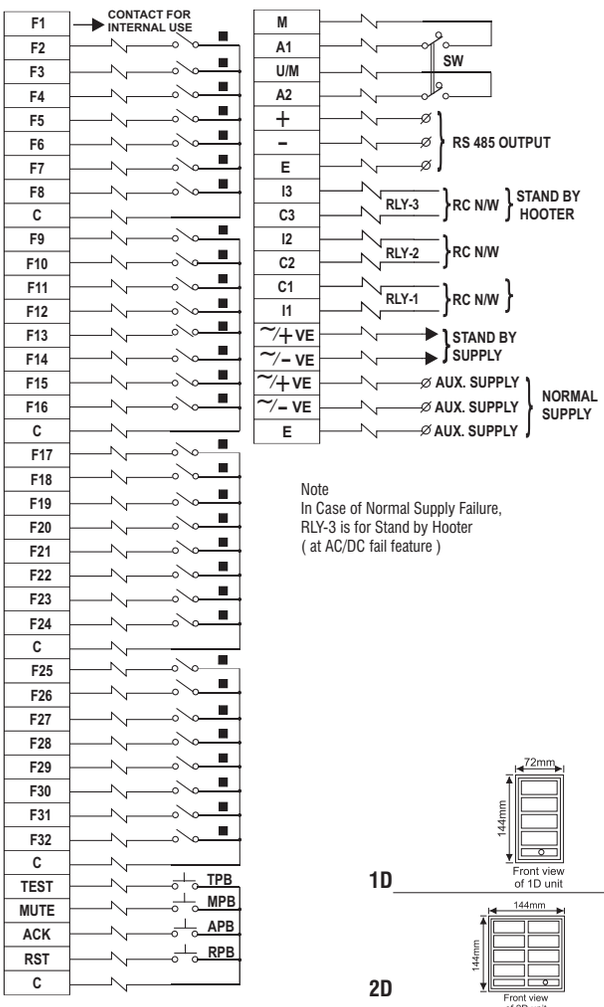

Note
In Case of Normal Supply Failure,
RLY-3 is for Stand by Hooter
(at AC/DC fail feature)

TECHNICAL SPECIFICATIONS :

Supply Voltage	24 / 30 / 48 / V DC, 20-60 V AC/DC, 90-270 V AC / DC			
Windows	4 / 6 / 8 / 12 / 16 / 18 / 22 / 24 / 32			
Window Sizes	30 x 30mm / 30 x 65 mm			
Display Device	Super bright high efficiency low power consuming LED's			
Facia Type	Individual windows Front Replaceable			
Window/LED Colours	RED, Yellow, Green, White & Blue			
Flash Rate	Fast - 60 flashes/min. Slow - 30 flashes/min.			
Response Time	25 msec. ± 10 msec.			
Input Signal	Potential free contacts (NO or NC site selectable)			
Interrogation Voltage	+ 12 V DC			
Output Contacts	1 NO + 1 NO (Optional) + 1 NO (optional)			
Architecture	Integrated			
Operational Sequences	Auto/Manual/First-up/Ringback (optional) OR any other sequence on request			
Operational Temp.	0-60 degrees C			
Power Consumption	1.5 Watts per Window (Max)			
Optional	Grouping / AC-DC fail Annunciation / Repeat Relays / RS232 - 485 Port			
Dimensions (mm)	**1D**	**2D**	**3D**	**4D**
Panel Cutout (L x W)	138 x 68	138 x 138	138 x 210	138 x 282
Overall (L x W x D)	144 x 72 x 215	144 x 144 x 215	144 x 216 x 215	144 x 288 x 215

Wherever not specified Contact Rating : 5A @ 230 V AC (resistive) * CE marked products available on request.

Dimnesional & Panel Cutout Details

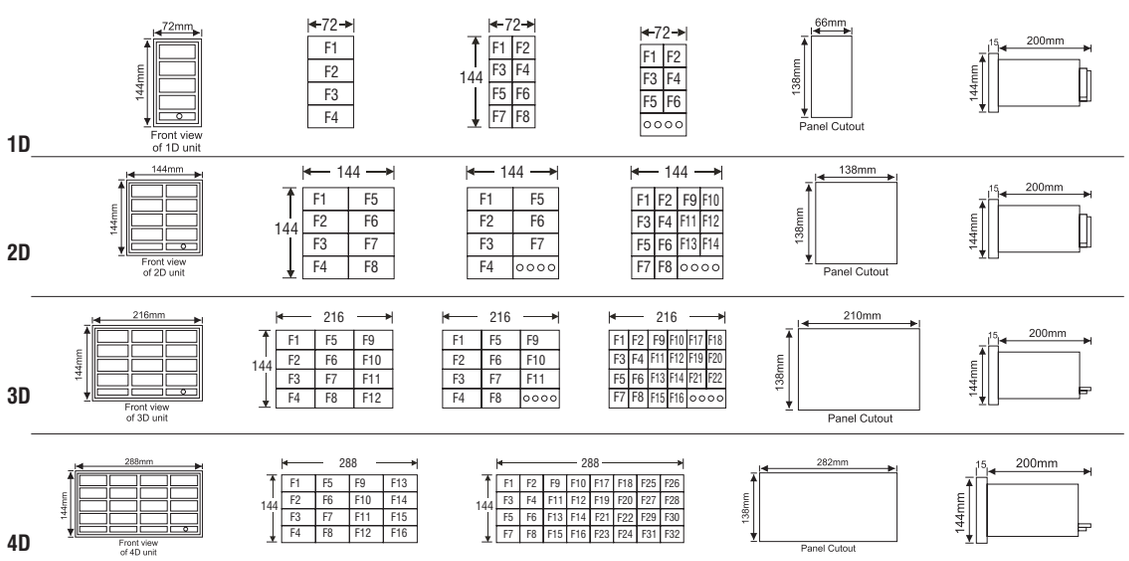

MBAS 9700

Integral Model : 16 Pts. Small

Integral Model : 16 Pts. Big

STANDARD FEATURES

• Single chip micro-controller logic. • Super bright LED's for window illumination. • Site selectable NO/NC type fault contacts. • Site selectable trip /Non trip (Grouping). • Easy card replacement & hence fault diagnosis. • Switch Mode Power Supply. (Suitable for Both AC/DC Supply) • High noise immunity and wide input supply variation. • Opto-isolated Inputs and Outputs. • Site Selectable sequences. • Potential free dry input contacts. • Two different window sizes. • Replaceable windows & window legends. • Computer linking for fault logging with printer facility for report. Self-surveillance watch dog LED. • Relay output for external audible hooter. • Diagnostics Menu • Redundant Power Supply (Only in 19" Rack Model) • CPU fail & PSU fail indication with relay output contact (Only in 19" Rack) • User Friendly terminal Connectors

CONSTRUCTIONAL DETAILS

MBAS 9700 consist of four basic sections (in 16 point moulded enclosure these are inbuilt)

1) The Power Supply Unit (PSU Module).
2) The Main Control Unit (CPU + IOU Module).
3) The Display Facia Unit (DFU Module).
4) Computer interface.

OPTIONAL FEATURES

• Different colored LED's in each window for easy differentiation of critical faults.
• Customized preprogrammed operating sequence.
• Multi channel serial communication (8 Annunciators & single computer)

MINILEC offers its unique alarm Annunciator based on the latest single chip micro-controller technology with serial communication facility. Now available in both 19" rack type enclosure as well as in moulded enclosure. MBAS 9700 annunciators have split architecture for 16, 24, 32, 48, 64, 80, 96,112 & 128 windows and integral type of architecture for 16 small or big window models. 24, 32, 48, 64, 80, 96,112, & 128 window models are housed in 19" rack type enclosures, separate for MCU & for PSU. Here choice of facia (DFU) is of 3 types (a) Small size i.e. 30 x 30 mm and (b) Big size is 30 x 65 mm / 50 x 70 mm. (c) Facia is available in multiples of 16 windows. In addition to all other standard features, MBAS 9700 has additional facility of computer linking. A serial port (RS232C /RS485) output is available which can be supported by an IBM compatible PC of minimum 386 configuration. Minilec can supply the standard software with every model or can develop suitable software as per customer requirements or can provide source coding / protocol details to enable client to develop their own suitable software.

THE MAIN CONTROL UNIT (MCU)

CPU module is the Main Processing Unit of MBAS 9700 which scans and processes the incoming fault signals from the various potential free field contacts through IOU module, and drives the corresponding LED windows and the audible device in order to annunciate the fault through IOU module. The IOU module is the input & output interfacing unit. To each IOU module 16 input contacts (potential free) & 16 window LED's can be connected.

THE POWER SUPPLY UNIT (PSU)

PSU converts the available power source into a regulated and filtered DC output, which is fed to the MCU Module & DFUs. The power supply can accept Specified AC or DC I/P supply, depending upon the application. Redundant Power supply is available.

THE DISPLAY FACIA UNIT (DFU)

The Facia block is accessible from front (in moulded enclosure) and constitutes of window capsules. The sandwiched photo film window inscriptions are press fitted on the window capsules.

For 16 to 128 points system the DFUs are given separately, except 16 point (moulded Enclosure) where it is in built.

minilec®

MBAS 9700

PSU Rack

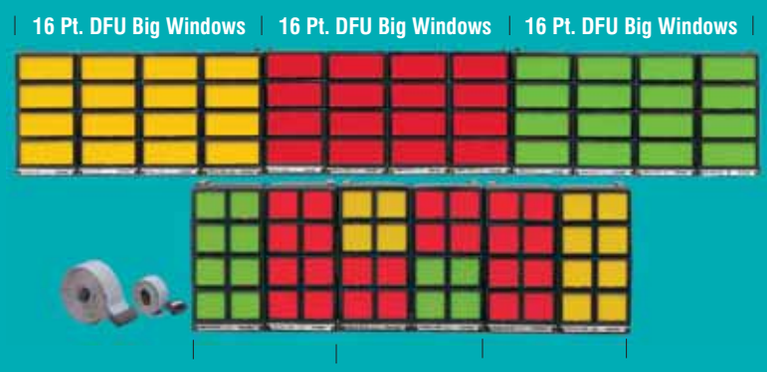

MCU Rack

COMPUTER INTERFACE

The MCU unit transmits fault information to computer serially. RS 232C/RS 485 standard is used for serial communication. Communication protocol modbus ASCII / RTU can be offered. In computer user-friendly software is written. This software offers on-line Date & Time setting, Legend setting, Display window & also it gives fault report with on demand printing facility.

Dimensional Details for Facia

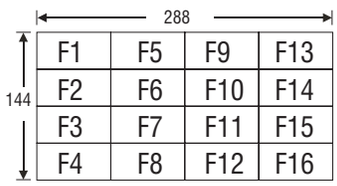

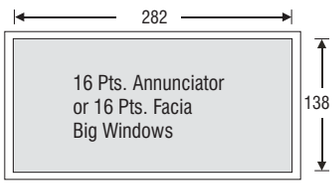

Panel Cutout

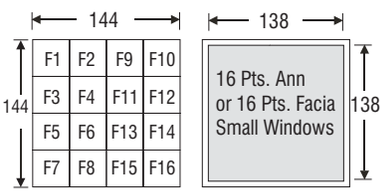

Panel Cutout

TECHNICAL SPECIFICATIONS:

1.0	**Supply voltage**	18 - 58VDC, 90 - 270VAC/DC
2.0	**Supply frequency**	50 / 60 Hz. (±3%) for AC
3.0	**Input**	
3.1	Fault Alarm Inputs.	Actuation Through Fault Contacts
3.2	Fault contacts.	Potential free (volt free) type
3.3	Input interrogation voltage	+12V DC(ISO)
3.4	Input isolation	Opto isolating device.(2 KV)
3.5	Response Time	40 mS.
3.6	Site selectable DIP for	
	Fault type	NO/NC
	Grouping	Trip/Non Trip
	Sequence selection	Manual/Auto/Ringback/Firstup
4.0	**Output**	
4.1	Output contacts for grouping	1NO+ 1NO
4.2	Output contact for CPU & PSU fail	1NC (In 19" Rack Only)
4.3	Contact Rating	5 amp at 240 VAC (Resistive)
5.0	**No. of windows**	32/40/48/64/80/96/112/128
5.1	Windows dimensions	30 mm x 30 mm For small windows
		30 mm x 65 mm For big windows
5.2	Colour	Red / Yellow {Amber} / Green, White, Blue
	Flash rates	
5.3		Fast flash - 50-60 flashes / Min
		Slow flash - 25-30 flashes / Min.
5.4	Power Consumption	1.5 W per Window. (Max)
6.0	**Sequence**	Manual, Auto, Ring back, Firstup
		(Any Other Sequences On Request)
7.0	**Serial communication**	RS232C / RS485 (with modbus ASCII/RTU)
		optional

DIMENSIONAL DETAILS - MCU & PSU

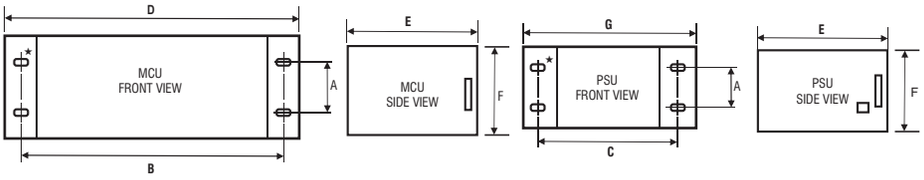

MODELS	MOUNTING DIMENSIONS			OVERALL DIMENSIONS			
	A	B	C	D	E	F	G
128 POINTS	57.15	465.10	292.38	482.60	260.00	132.50	310.38
112 POINTS	57.15	419.38	292.38	436.88	260.00	132.50	310.38
96 POINTS	57.15	373.66	241.58	391.16	260.00	132.50	259.58
80 POINTS	57.15	327.94	241.58	345.44	260.00	132.50	259.58
64 POINTS	57.15	434.62	--------	452.12	260.00	132.50	--------
48 POINTS	57.15	388.90	--------	406.40	260.00	132.50	--------
32 POINTS	57.15	292.38	--------	309.88	260.00	132.50	--------

Overall Dimensions (DFU)

MODELS	Big Windows		
	W	L	D
128 POINT	144m.m.	2304m.m.	70m.m.
112 POINT	144m.m.	2016m.m.	70m.m.
96 POINT	144m.m.	1728m.m.	70m.m.
80 POINT	144m.m.	1440m.m.	70m.m.
64 POINT	144m.m.	1152m.m.	70m.m.
48 POINT	144m.m.	864m.m.	70m.m.
32 POINT	144m.m.	576m.m.	70m.m.
	Small Windows		
128 POINT	144m.m.	1152m.m.	70m.m.
112 POINT	144m.m.	1008m.m.	70m.m.
96 POINT	144m.m.	864m.m.	70m.m.
80 POINT	144m.m.	720m.m.	70m.m.
64 POINT	144m.m.	576m.m.	70m.m.
48 POINT	144m.m.	432m.m.	70m.m.
32 POINT	144m.m.	288m.m.	70m.m.

PANEL CUTOUT DETAILS - DFU

	P	Q	R
Small Window	138mm	138mm	6mm
Big Window	138mm	282mm	6mm

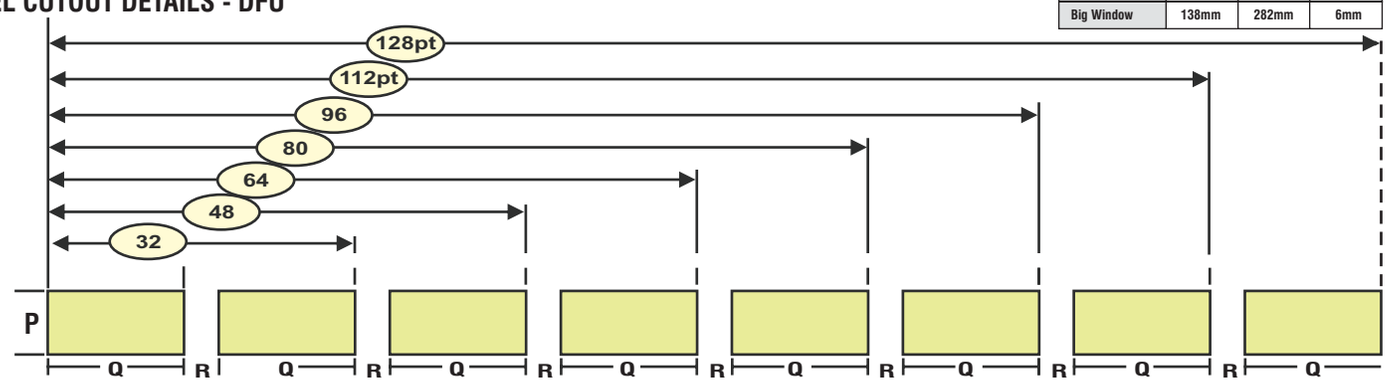

EXTERNAL WIRING DIAGRAM WITH REPEAT RELAY

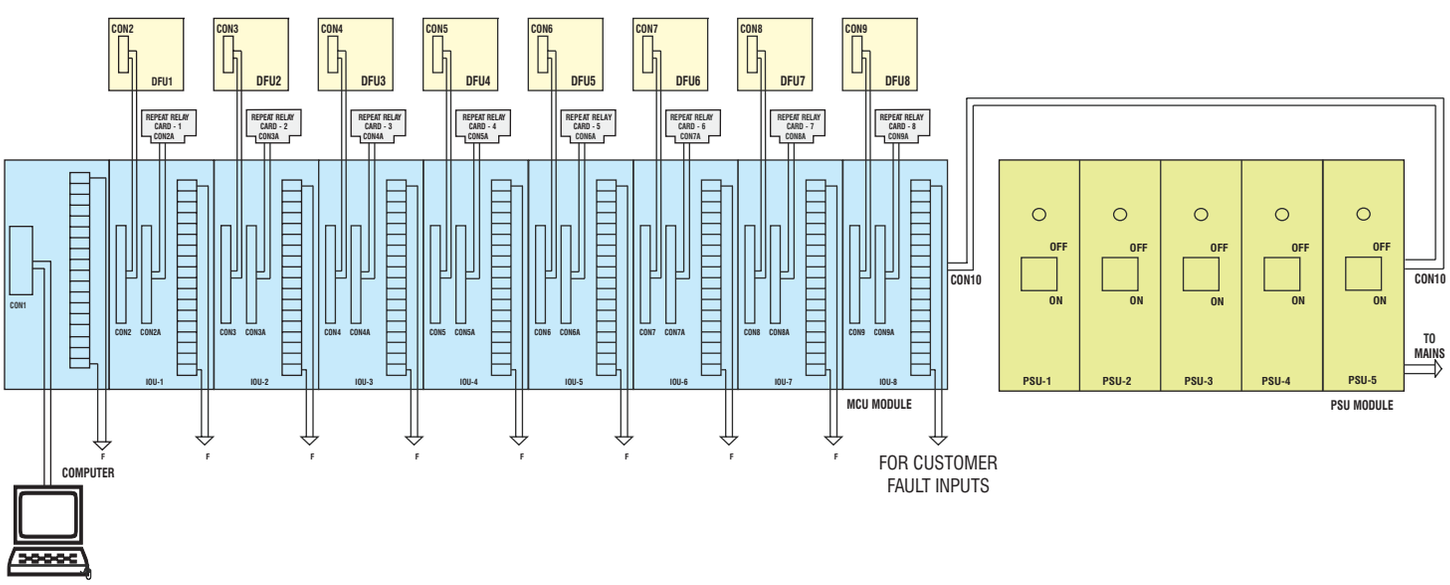

ALARM ANNUNCIATORS

MBAS 9900

1 OB 6S PB 1 OB 4S PB

MBAS 9900 screens Annunciator accepts 12 / 24 V DC potential input & also provides control relay output. Added built-in buzzer & push buttons makes it complete Annunciator with control output. This output is interlocked until all fault input resets. MBAS 9900 is presently available in 4 point & 6 point small window (30 x 30mm) configuration. Both 4 point & 6 point systems come with built-in push buttons.

Technical Specifications :

PARAMETERS	
Supply Voltage	230 V AC / 110 V AC, 12 V / 24 V DC +10% -15%
Windows	4 / 6 / 8
Window Sizes	30 x 30 mm
Display Device	Super bright LED's
Facia Type	Individual Windows Front Replaceable
Window/LED Colour	RED, Yellow / Amber, Green
Flash Rate	Fast - 60 flashes/min. Slow - 30 flashes/min.
Response Time	25 msec. ± 10 msec.
Input Signal	+12 V or 24 V DC Contact
Output Contacts	1 CO + 1 CO
Architecture	Integrated
Operational Seq.	Sequence as mentioned in text
Operational Temp.	0-60°C
Power Consumption	1.5 Watts per Window

Wherever not specified Contact Rating : 5A @ 230 V AC (resistive)

Operating sequence table - MBAS 9900

	N		ABN	RN	R-ABN	N	ABN	N	ABN	R-N	R-ABN	N	ABN
MANUAL	P.B. TEST					SILENCE		ACCEPT			BEFORE RESET	RESET	
ACTION	DEP	REL											
VISUAL	F	OFF	F	OFF	F	N. A.	F	N. A.	S	S	S	OFF	F
AUDIO(N)	ON	OFF	ON	OFF	ON	N. A.	OFF	N. A.	OFF	OFF	OFF	OFF	ON

ABBREVIATIONS :

N	NORMAL		S STEADY ON
ABN	ABNORMAL	AUDIO(N)	NORMAL BUZZER
RN.	RETURN TO NORMAL	DEP.	DEPRESSED
RABNS	RETURN TO ABNORMAL	REL.	RELEASED
		N.A.	NOT APPLICABLE
		F	FLASH

Dimensional Details

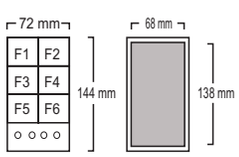

Panel Cutout

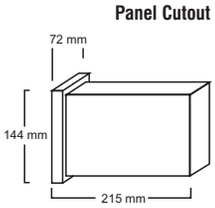

Connection Diagram

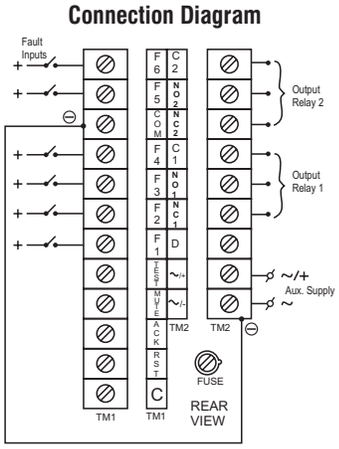

MICROFACIA

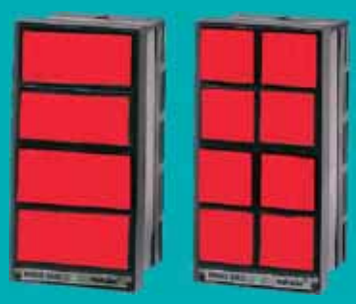

MF951 MF955

These are LED Facia windows with Potential input or potential free input. Microfacia is available in either 4 Big or 8 Small windows size. Standard models available for 12V/24V DC and 110V/230V AC.

Microfacia are LED window assemblies for RUN, TRIP or FAULT indications. With microfacia windows the panel designers can improve aesthetic value to the panel indications in a Row / Column format. Microfacia is useful for direct operation with AC or DC voltage

Technical Specifications :

PARAMETERS	
Auxiliary Supply *	12 / 24 / 110 / 220 V AC / DC
Input	Potential Free Contacts or Potential Contact
Output	Window Facia LEDs on front
Window /LED Colour	RED, Amber / Yellow, Green, White, Blue
Power Consumption	1.5 Watts per Window
Dimensions (mm) Unit	Overall (L x W x D) (w/o PSU 144 x 72 x 80)
	(With PSU) 144 x 72 x 215
Dimensions (mm)Window	for Small 30 x 30, for Big 30 x 65 mm.
Weight (Approx.)	700 gms. (With PSU)
	250 gms. (W/o PSU)

* Applicable only for Microfacia with potential free inputs.

Connection Diagram

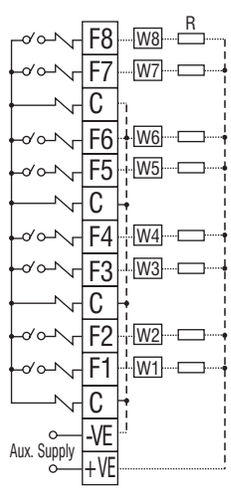

Potential-Free Fault Inputs

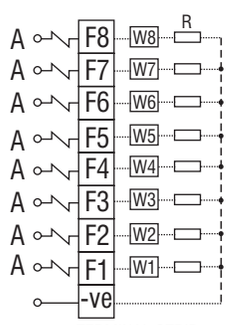

Potential Inputs

Dimensions

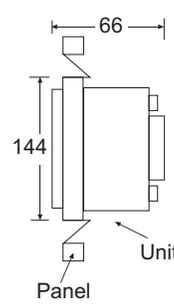

Panel Cutout

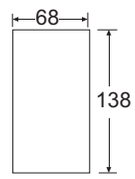

ALARM ANNUNCIATORS

New

MBAS 08

6 Windows + PB & Hooter

7 Windows + PB

8 Windows

Most compact alarm Annunciator with improved window design and all major features of MBAS 0600 Annunciator. Models with built-in Hooter & Push buttons also available.

Supply Voltage	90 to 270 VAC/DC + 10-15% 24 VDC /30 VDC /48VDC + 10,-15%
Supply Frequency [FOR AC]	50 / 60 Hz ± 3%
Windows	4/6/8 [max]
Display (Window)	Window lenses replaceable Legends replaceable.
Window Dimensions	37 X 17 mm.
Power Consumptions	Red window 0.15 Watt / Window and other Colour window 0.25 Watt / Window.
Flash Rate	50 - 60 Flash per min. in fast flashing 20 - 30 Flash per min. in slow flashing
Operating Sequence	S1, S2, S3, S4 (Site Selectable)
Other Features	• NO / NC and Grouping (Trip/Non trip) Selection • Supervisory Contact output.
Optional Features	• Any other operating sequence. • RS485 Output • Man / Unmanned Feature. • Supply fail Annunciation
Input Signal	Potential Free contacts
Input Interrogation Voltage	+12 VDC
LED Colour in Windows	Red, Green or Yellow (Amber), Blue.
Output Contacts	1 NO + 1 NO [For Hooter] 1NO For Ring back or Supervisory contact (Optional)
Output Contact Rating	5 Amp, 240V AC (Resistive)
Inbuilt Push Buttons	4 NOS. (Test, Mute, Accept, Reset) Membrane type (Optional)
Communication	RS232 (MODBUS RTU/ASCII) (Optional)
Operational Temp. Limit	0°C TO + 60°C
Humidity	Upto 95% Rh
Enclosure	ABS moulded enclosure
Unit Dimensions Overall (L x W x D) Cutout (L x W)	 96 x 96 x 76 mm 92 x 92 mm
Weight	350gm

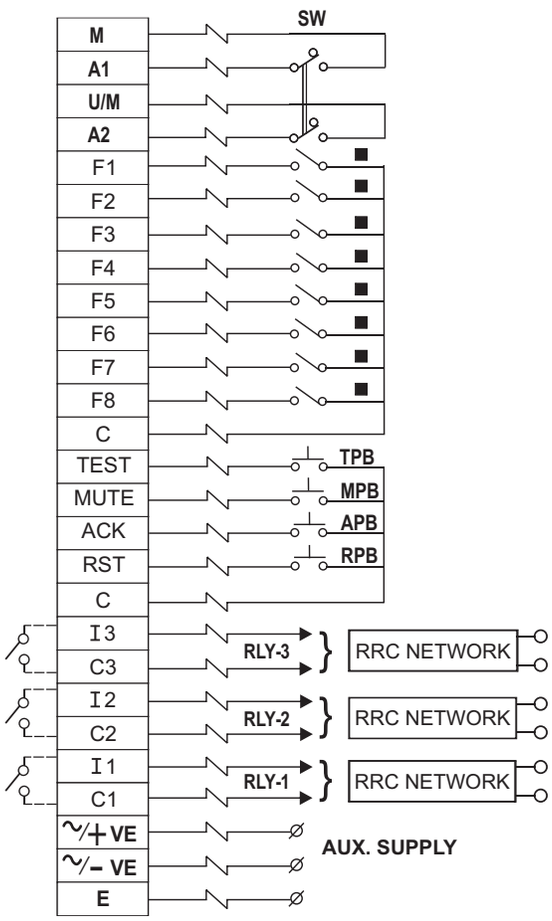

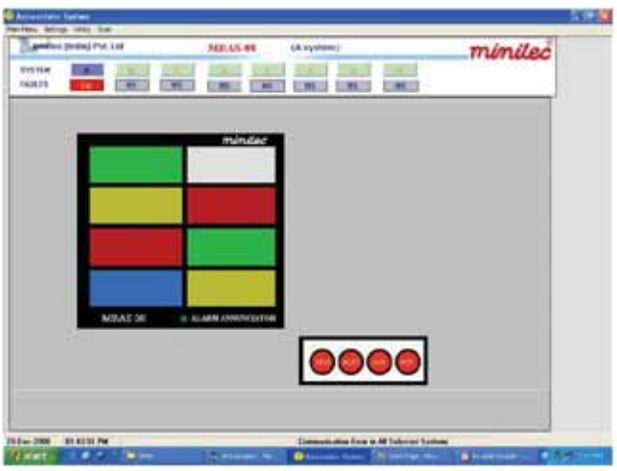

PC Side software

STANDARD OPERATING SEQUENCES

The MINILEC Annunciation systems are programmed to operate as per following operating sequences confirming to ISA standards. Other sequences / non standard sequences are given as per customer's requirement.

Minilec Sequence Code	Operating Sequence Title	ISA Std. Code
S1	Manual Reset	M1
S2	Auto Reset	A1
S3	Ringback	R1-12
S4	First UP	F2M-1

SEQUENCE S1 : Manual Reset (M1)

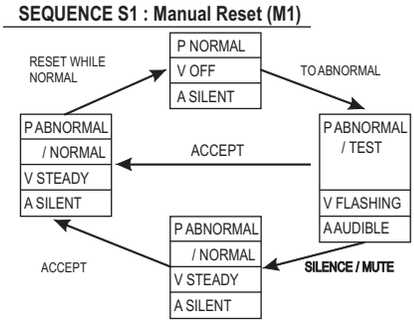

1. Test, Silence Accept, Reset Push Buttons are external.
2. Audible alarm can be silenced by pressing Silence (Mute) Push button.
3. Manual reset of Accepted faults after process conditions return to normal.
4. Operation test provided.

SEQUENCE S2 : Auto Reset (A1)

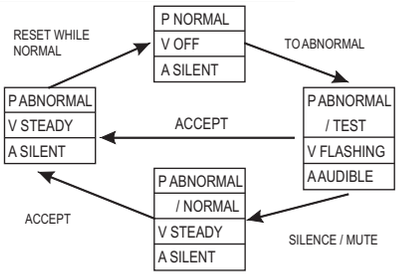

1. Test, Silence Accept, Reset Push Buttons are external.
2. Audible alarm can be silenced by pressing Silence (Mute) Push button.
3. Automatic reset of Accepted faults after process conditions return to normal.
4. Operation test provided.

SEQUENCE S3 : Ringback (R1-12)

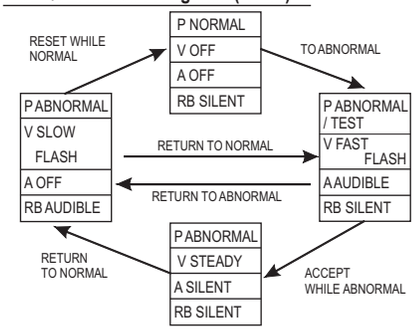

1. Test, Silence Accept, Reset Push Buttons are external.
2. Alarm & ringback Audible devices.
3. Audible device or ringback alarm can be silenced by pressing Silence (Mute) Push button.
4. Ringback visual & audible alarm when process status returns to normal.
5. Operation test provided.

SEQUENCE S4 : First Out Manual Reset

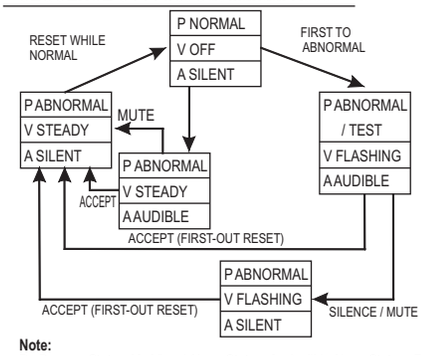

1. Test, Silence Accept, Reset Push Buttons are external.
2. First-out flashing and subsequent steady.
3. Manual reset of Accepted faults when process status return to normal.
4. Operation test provided.

Note:
P : Process Status, **V :** Visual Alarm Status, **A :** Audible Alarm Status, **RB :** Ringback audible alarm status.

OPTIONAL ACCESSORIES

Repeat Relay Card

External Repeat Relay Cards can be connected for remote annunciation or interfacing with SCADA or DCS hardware. These cards are connected by plug-in type pre-fab cables. Repeat Relay Card IS Suitable for NO type Fault contacts only.

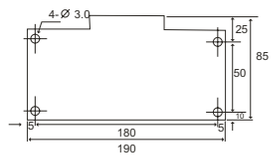

Manned / Unmanned Facility

This feature allows disabling the audio & visual indication on fault occurrence if the station is unmanned. The annunciator registers & records all faults occurring during unmanned mode and displays again manned mode.

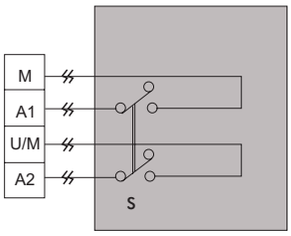

RS 232 / 485 Convertor

This is a universal convertor for converting RS 232 serial port to RS 485 serial port or vice versa. It operates on 230 AC supply and is to be used with Minilec make interconnecting cables for Minilec annunciators & for PC.

d) Electronic / Industrial Hooter

Electronic Hooters with tone & volume control are supplied. Suitable for AC or DC supply Standard 96 x 96 enclosure.

ANNUNCIATOR PANELS

Often Alarm Annunciators are required to be housed in a suitable cubical and many times such control panel consists of only Alarm Annunciators. Minilec offers Alarm Annunciators along with control panels. This includes design of control panel, fabrication, painting, assembly of Alarm Annunciators and assistance during installation and commissioning.
Retrofitting work by replacing old annunciation system with latest design and for expansion in power stations, substations, process plants as also standard Annunciation Panels for plants and equipments can be catered to.

The Minilec Panel Advantages

- Complete in-house design, assembly of Annunciator Panels.
- Software capability for automisation to meet project specifications.
- Component layout as per standards & safety requirements.
- Powder coated MS or Aluminum Rack Panels with quality panel wiring.